2020 Building Performance Analysis Conference and
SimBuild co-organized by ASHRAE and IBPSA-USA

# DECENTRALIZED APPROACH TO MULTI-ZONE GREY-BOX MODELING FOR MODEL-BASED PREDICTIVE CONTROL

Jaewan Joe[1], Borui Cui[1], Piljae Im[1*], Jin Dong[1], and Kuruganti Teja[1]
[1]Oak Ridge National Laboratory, Oak Ridge, United States of America

## ABSTRACT

This study aims to improve the easiness of utilizing the grey-box model (i.e., Resistance-Capacitance circuit) for Model-based Predictive Control (MPC). The primary barrier of implementing the MPC is estimating the control-oriented building model that needs to be computationally inexpensive and quick but reasonably precise in predicting building load and indoor conditions. The estimating of the model parameters becomes more complicated when the building scale is larger; e.g., multi-zone building. In this study, a decentralized approach is introduced; each zone is split and individually estimated with measured boundary temperature from adjacent zones integrated into one single system model. The proposed decentralized method is demonstrated with experimental data from a full-scale multi-zone test cell compared with the centraliozed reference case.

## INTRODUCTION

Commercial buildings consume more than 19% of the total energy usage in the US, and Heating, Ventilation and Air Conditioning (HVAC) systems account for 27% of energy consumption (DOE 2011). Therefore, reducing excessive electricity consumption and peak demand for the commercial sector is one of the most urgent tasks. The advanced control of the building and its HVAC system is considered as a solution to resolve the building energy-related issue.

The MPC, one of the most advanced control strategies, is expected to save the building energy consumption by optimizing control sequences using the building thermal model and its HVAC system models with weather and disturbances forecasts (Rawlings et al. 2018). At each time-step, an optimal control problem is solved over a prediction horizon based on the predicted building thermal behavior and disturbances. Then the first control sequence is implemented to the system, and a new optimal control problem is solved with new predicted information.

A number of studies have shown the energy-saving potential through the MPC approach for the commercial building sector. In a simulation study with a single zone served by an air-cooled chiller model, around 10~16% of cost-saving is achieved from the multi-agent distributed optimization targeting the minimum monthly electricity bill including the HVAC operation and demand cost (Cai et al. 2016). Also, a multi-zone simulation study shows the superior control performance (i.e., 4% of energy-saving) of the simplified MPC to the heuristic rule-based control by utilizing the pre-cooling of the building thermal mass with a direct expansion air conditioning system as an HVAC source (Cai and Braun 2015b). And when the MPC is applied to a tall multi-purpose building, electricity cost is reduced by 36% and 25% in cooling and heating seasons, respectively (Bianchini et al. 2019). Moreover, in the case of the system with large thermal mass (e.g., radiant floor system), the significant amount of the saving is achieved (e.g., 27 to 34% of cost-saving compared to a feedback control) (Joe and Karava 2019, Joe et al. 2018).

The grey-box building model is in the middle of the white-box and black-box models that are fully based on physics and data-driven, respectively (Arendt et al 2018). Compared to others (e.g., black box and white box models), the grey-box model has distinct advantages. The model structure and its parameters preserve the physical insight resulting in the most robust data-driven model unlike a subspace model (e.g., N4SID, a numerical algorithm for subspace state-space system Identification). Also, it is possible to predict the longer building thermal dynamics (e.g., several hours or days) while the classical system identification-based models such as prediction error method (PEM) only predict the one-step (e.g., one hour) updating the model parameters with the most recent data of the control input, disturbances, and resulting building dynamics. For this

reason, a number of previous studies reported its robust performance. One good example is presented for a residential building model that leverages machine learning to improve the prediction performance (Cui et al. 2019). Also, in a commercial building sector, the multi-zone building served with air handling units (AHU) is modeled with systematic approach by splitting the entire multi-zone into a couple of multi-zone according to the degree of the thermal coupling in order to reduce the number of estimated parameters (Cai and Braun 2015a) and minimizing the unmeasured disturbances, namely lumped disturbance model based on the theoretical background (Kim et al. 2016 and Kim et al. 2018). And radiant floor system is modeled in a single zone based on the multi-agent approach with a distributed optimization method (Joe and Karava 2016) which is implemented to an actual building for the demonstration of MPC (Joe et al 2018).

However, constructing a precise control-oriented building model is one of the main barriers to implement the MPC to the building in reality. Engineering cost for the control-oriented building model is reported about 70% of the total project budget (Henze 2013). At the same time, without the fine model, superior/accurate MPC performance is not guaranteed; the impact of the building model on the building energy usage with the MPC approach is reported by about 20% (Blum et al. 2019). With regard to the grey-box model, specifically, RC circuit in this study, optimization for estimating the model parameters is challenging due to its nonlinear nature; specifically, model parameters including the resistance and capacitance are nonlinear with the objective function which is typically the summation of squared deviation between the predicted and measured temperature trajectories.

Moreover, as the building scale becomes larger (e.g., multi-zone), the dimension of the estimate parameters is increased which burdens the computation and decreases the optimality of the solution. Also, in the case of the multi-zone, the objective function is the summation of the error of each zone and model quality might depend on the degree of the fluctuation for each zone; e.g., parameters tend to be well estimated for more excited zones. In this regard, a decentralized approach for modeling the control-oriented building model needs to be developed which is flexible, scalable, and applicable to large-scale building applications such as multi-zone, the whole building, or building clusters.

This study aims to develop the decentralized modeling method for the grey-box model in MPC applied to the building/HVAC system. In order to validate the method, the experiment is carried out with a full-scale unoccupied multi-zone commercial building. The model parameters for every single zone are estimated individually and then integrated without further optimization. The prediction performance of the estimated and integrated building model is discussed with the estimation and validation sets.

In this study, a methodology is discussed first with a general example for decentralized modeling and then the case study modeling is presented based on the experiments conducted in a full-scale multi-zone building. The prediction performance of the decentralized method is compared with the conventional centralized case.

## METHODOLOGY

### Control-oriented building model

In this study, a grey-box model that consists of a resistance/capacitance (RC) circuit is estimated in a state-space formulation. Building thermal systems are built from a heat balance equation in the form of a 1st order differential equation with parameters such as Resistance (R) and Capacitance (C) and coefficient multiplied to the disturbance inputs. In order to utilize the advanced control strategies, those systems of equations are formulated with one system in a matrix form with a state-space formulation. The matrices $A$ and $B$ consist of the $R$, $C$, and coefficients multiplied to the disturbance inputs. A continuous-time state-space linear system is defined by the following equations:

$$\dot{x}(t) = Ax(t) + Bu(t) \quad \text{(eq 1)}$$

$$y(t) = Cx(t) + Du(u) \quad \text{(eq 2)}$$

Equation 3 represents the optimization formulation to estimate the building parameter set denoted as $\theta$ that consists of multiple $R$, $C$, and $\alpha$. Due to the non-linearity between the parameter set and the objective function (typically two-norm, root mean square error (RMSE)), the nonlinear optimization method needs to be utilized. $\hat{Y}$ and $Y$ represents the predicted and measured room air temperatures. The $i$ and $n$ mean the time and number of data.

$$\theta^* = \underset{\theta}{\operatorname{argmin}} \sum_{i=1}^{n} \sqrt{\frac{(\hat{Y}(\theta)_i - Y_i)^2}{n-1}} \quad \text{(eq 3)}$$

### Decentralized approach

Rather than estimating all parameters in one optimization problem, the decentralized approach scales down the optimization problem from the multi-zone level to multiple single zones. Figure 1 represents the generic example of this approach. This is two multi-zone exposed to an outdoor environment. Each zone consists of one state and outdoor air temperature as a boundary temperature. With the conventional centralized approach, this is *2C4R* model and reduced to *1C2R* model in a decentralized approach. The number of estimate

parameters including the $R$, $C$, and the coefficient is reduced from 8 to 4. And we reasonably assume an imbalanced thermal coupling between two zones; e.g., bidirectional airflow through the gap under the door.

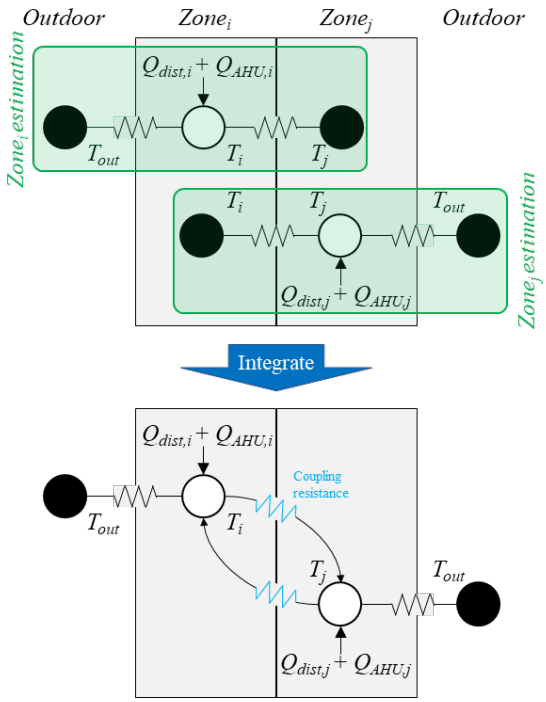


*Figure 1 Generic example of decentralized estimation*

**Model performance evaluation**

We use the RMSE to quantify the prediction error of the estimated building model as shown in equation 4. $T_{meas,i}$ and $T_{simu,i}$ represent the measured and simulated room air temperatures.

$$RMSE = \sqrt{\frac{\sum_{i=1}^{n}(T_{meas,i} - T_{simu,i})^2}{n-1}} \quad \text{(eq 4)}$$

## CASE STUDY WITH FULL−SCALE MULTI−ZONE BUILDING

**Test-bed description**

The flexible research platform (FRP) in Oak Ridge National Lab is used for the test. This is a two-story lightweight commercial building that represents typical small office buildings built in the 1980s in the U.S. The FRP has 10 conditioned zones with 2 unconditioned zones (i.e., staircase) with 0.4 m thick exterior wall as shown in Figure 2. The FRP is an unoccupied research apparatus in which occupancy is emulated by process control of lighting, humidifiers for human-based latent loading, and a heater for miscellaneous electrical loads (MELs). The 44 kW rooftop unit (RTU) conditions the zones with an air handling unit (AHU) and variable air volume (VAVs) boxes in each room.


*Figure 2 Front view(top) and plan drawing (bottom) of the test-bed*

A weather station on the roof measures outdoor air temperature, relative humidity, and solar radiation. In addition, wall-mounted pyranometers installed in each external wall (North, East, South, and West) measure the vertical solar radiation on each wall. Each room air temperature is measured in the center of the room with a cylinder-type temperature/humidity probe. The same type of sensor measures the supply air temperatures in all 10 VAV boxes. Airflow rate entering all individual rooms are measured in VAV boxes with flowmeters. The power consumption of the heaters & humidifiers and lighting that are controlled remotely with pre-defined schedules are measured in each room and floor level, respectively.

**Experimental design for modeling**

In order to decorrelate the exogenous inputs (e.g., outdoor air temperature and solar radiation) and control input (i.e., cooling rate from AHU), FRP has been operated with and without HVAC system for every 3 hours to generate the perturbed control input. With this HVAC operation, room air temperatures of all rooms free-float without an HVAC system, and the HVAC system is turned on to reduce the room air temperature with the cooling provided. All internal heat gains from the heaters, humidifiers, and lightings are controlled with typical office schedules, which are measured. The interior doors are closed however it has the gap on the bottom likewise a typical door where the Interzone air flow might occur.

The test is conducted for 13 days from Sep 20$^{th}$ to Oct 2$^{nd}$, 2019. Prior to the test, the building was being conditioned in a typical office occupied and unoccupied

schedule. Those and the first day of the test period are used as warm-up days. The two days' data in Sep 21st and 22nd is used for the estimation, and another two days are added at the end of the estimation period for the validation (i.e., Sep 21st to 24th as a validation period).

**Reference case: centralized approach**

The conventional centralized optimization is carried out as a reference case. Figure 3 shows the thermal network of the building model in a centralized approach (2nd floor only without heat flux inputs for simplicity). The structure of the model is 20C36R with 17 coefficients multiplied to the disturbance input (e.g., solar radiation). The total number of the estimated parameters is 70. Each zone has two capacitances for the room air and envelope. The heat transfer between the floors and interior wall are assumed ignored; e.g., adiabatic boundary likewise one of the literature (Cai and Braun 2015b; Cai et al. 2016). However, the model has an imbalanced thermal coupling (two resistances, as illustrated in Figure 3 with two arrows) between the perimeter zones and core zone through the door; i.e., potential bidirectional air movement under the door.

The convection/radiation heat gain from the internal equipment to the room air and envelope is set based on the assumption due to the lack of specific reference. The 60% of the internal heat gain from the heaters and humidifiers goes to the room air roughly adopting the convection/radiation ratio for typical office equipment from the literature that has more weight on convection (Hosni et al. 1999). And that of lighting heat gain is also roughly adopted from the ASHRAE fundamental (Ch. 18); 60% goes to the envelope as radiation (ASHRAE 2017).

The initial values for all estimated parameters are set based on the drawing and reasonable assumptions; e.g., room air capacity is set from the room volume and specific heat of the air, and the room capacity is upper bounded only. The typical convective heat transfer coefficients (3.05 W/(m$^2$K) and 17.7 W/(m$^2$K) for inside and outside respectively) are adopted from building energy simulation programs (e.g., TRNSYS (TRNSYS 16 2007)) to calculate the initial thermal resistance between the outdoor, envelope, and room air. In order to reduce the engineering cost and improve the easiness of the large-scale multi-zone modeling, roughly averaged values are used for the initial value; e.g., different design for each room is averaged. Their lower and upper bounds are set with the power of $\pm 10^2$ (i.e., $\theta_0 \times 10^{-2} \leq \theta \leq \theta_0 \times 10^2$). The *fmincon* is used in Matlab environment as a nonlinear optimization solver (Mathwork).

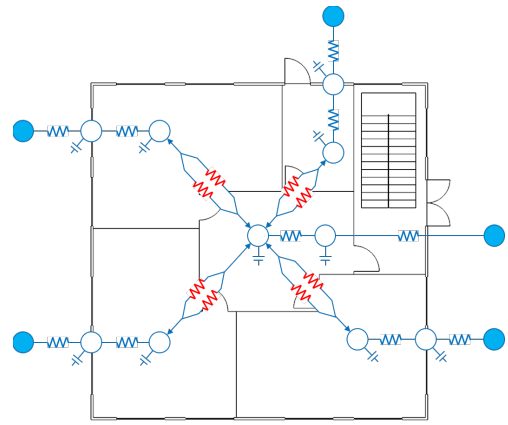

*Figure 3 Thermal network of a centralized model*

Figure 4 shows the modeling results of estimation and validation sets for the 2nd (top) and 1st (bottom) floor. Mostly, the RMSE is higher than 1°C; their average for each floor are 1.5°C, 2.2°C, and 1.2°C, 1.2°C for estimation (2days) and validation (4days) sets (i.e., prediction horizons are 2days and 4days and time-step is 15min). The highest and lowest RMSE is 4.3°C (room 103) and 0.9°C (room 204) in a validation set as shown in Figure 5. The prediction trend mostly follows the measurement, however, this model is not reliable enough to be used for MPC simulation study and implementation.

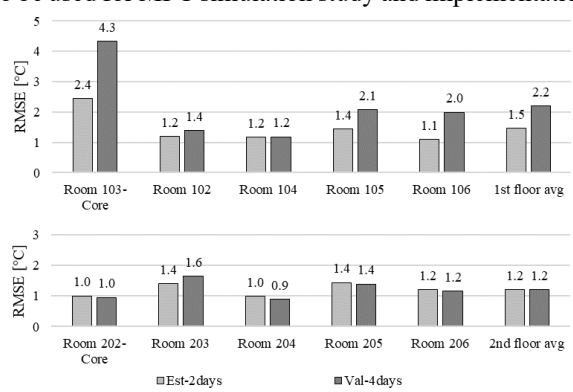


*Figure 4 Estimation and validation results of a conventional centralized approach*

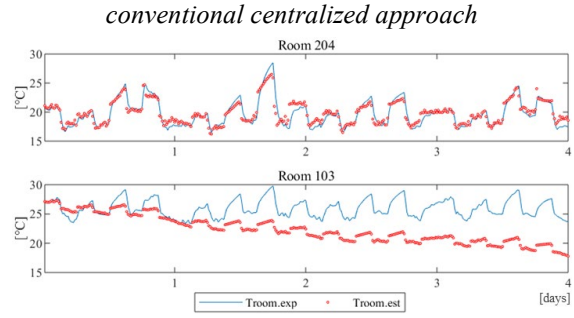


*Figure 5 Room air temperature comparison of integrated model validation in a centralized approach (top: best case, bottom: worst case)*

**Decentralized approach**

Single zone estimation and validation

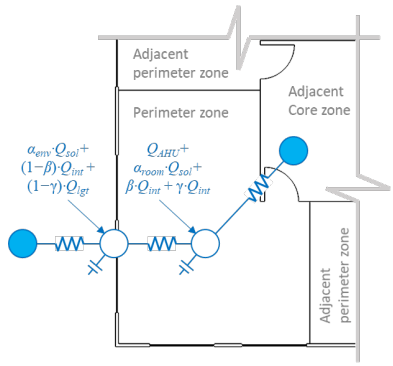


*Figure 6 Thermal network of a single zone in a decentralized approach*

Figure 6 shows the single zone (room 205) in a decentralized approach as an example. The number of estimated parameters is 7 including two capacitances, three resistances, and two coefficients multiplied to the disturbance inputs (e.g., solar radiation). The multiple estimations for the individual room are carried out sequentially with boundary temperature trajectories from the adjacent zone (i.e., only between the core and perimeter zone) for two days. Then, the simulation for the validation set runs with an additional two days added at the end of the estimation set.

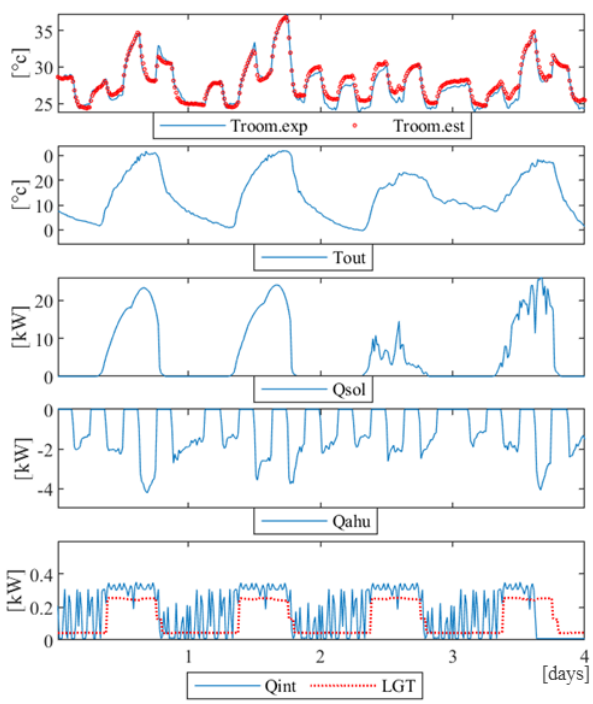


*Figure 7 Room air temperature comparison for estimation and validation along with disturbance and control inputs (room 206, the worst case).*

Figure 7 represents the modeling results with decentralized approach for room 206 (the worst case); it shows room air temperature comparison ($T_{room.exp}$ and $T_{room.est}$) of the estimation (day1~2) and validation (day1~4) results along with disturbance inputs (i.e., outdoor air temperature ($T_{room}$), solar radiation ($Q_{sol}$), internal equipment heat gain ($Q_{int}$), lighting heat gain ($LGT$)) and control input (i.e., cooling rate from AHU/VAV ($Q_{AHU}$)). The RMSE of the estimation and validation sets are 0.7°C and 0.6°C, respectively. The prediction performance is improved (roughly half cut of error) compared to the conventional centralized approach; e.g., 1.2°C vs. 0.6°C.

Integrated model validation

Estimated single zone models are integrated into one model (likewise Figure 3) without further estimation efforts. However, this work requires cumbersome engineering costs. In order to improve the easiness of this integration procedure, every single system is input to the integrated model in a loop fashion; e.g., *for loop*. And coupling terms between the core and perimeter zones are input manually (red resistance in Figure 3).

Figure 8 shows the RMSE of the integrated model along with estimation and validation sets of individual single-zone modeling. The averaged RMSE of each floor is 0.5°C and 0.6°C in a validation set with the integrated model. And Figure 8 shows the best and worst-case which are room 106 and 206). Their RMSE is 0.4°C and 0.7°C. When the model is integrated, the error of the adjacent zone impacts on the target zone temperature prediction while the actual estimation is carried out with measurement of the neighboring zone as a boundary temperature. This error can be accumulated in time. This effect seems not significant in this study due to the improved performance of the single zone models.

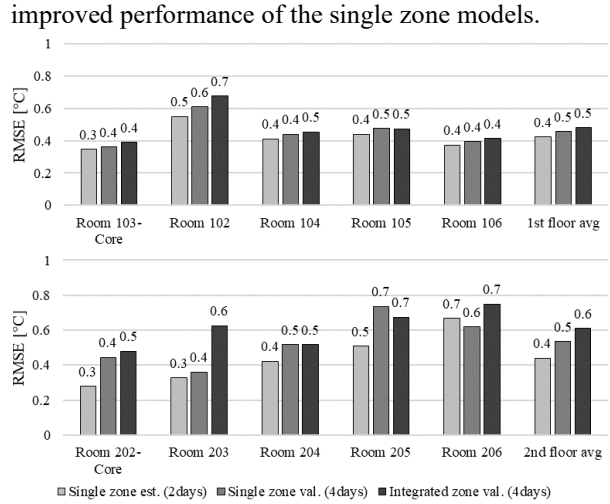


*Figure 8 Estimation and validation results of a decentralized approach*

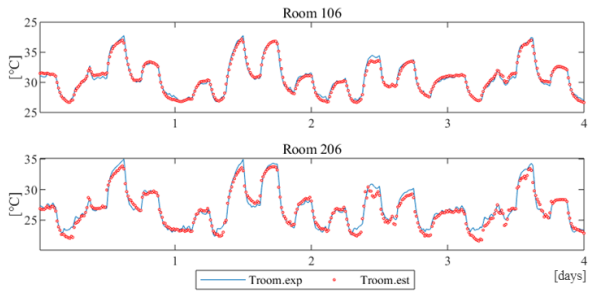


*Figure 9 Room air temperature comparison of integrated model validation in the decentralized approach (top: best case, bottom: worst case)*

Table 1 shows the minimum, average, and maximum RMSE of rooms in all 4 cases. As the decentralized model development proceeds, the RMSE increases. The final integrated model is much accurate than the conventional centralized model.

*Table 1 Minimum, average, and maximum RMSE (°C) of rooms in all cases*

| | Centralized | Decentralized | | |
|---|---|---|---|---|
| | Integrated zone validation | Single zone estimation | Single zone validation | Integrated zone validation |
| min | 0.89 | 0.28 | 0.36 | 0.39 |
| avg | 1.70 | 0.43 | 0.50 | 0.55 |
| max | 4.33 | 0.67 | 0.74 | 0.75 |

## CONCLUSION

This work proposes the decentralized approach to the multi-zone modeling for MPC application. Experimental data from the actual full-scale building is used for the demonstration. The integrated model shows good prediction performance. This method is scalable and applicable to the larger-scale building system. Specific findings from this work are summarized as follows:

- As a reference case, the prediction performance of the centralized model is limited to be used.
- Single zone modelings were successful with measured boundary temperature from an adjacent room in the estimation and validation set.
- The prediction performance of the final multi-zone model decreases slightly when integrated however still good to be leveraged for the actual implementation.

The estimated multi-zone model is planned to be used for the implementation of the cooling season in 2020. Some of the estimated model parameters need to be adopted as needed; e.g., coefficient multiplied to the solar radiation input that possibly depends on the solar angle in a year. The appropriate optimal control formulation will be developed based on the estimated building model in this study and developed/identified HVAC model (rooftop unit (RTU) with a direct expansion (DX) system for this study).

## ACKNOWLEDGMENT

The research presented in this paper was funded by the United States Department of Energy, Energy Efficiency and Renewable Energy Office, Building Technology Office under the grid modernization program.

## NOMENCLATURE

| Symbol | Meaning |
|---|---|
| $A$ | state matrix in state space formulation |
| $B$ | input matrix in state space formulation |
| $C$ | output matrix in state space formulation |
| $C$ | capacitance |
| $D$ | feedthrough matrix in state space formulation |
| $i$ | time (15min) |
| $n$ | number of data |
| $R$ | thermal resistance |
| $t$ | time in continuous system |
| $T$ | temperature |
| $u$ | system input of the state space formulation |
| $x$ | state (temperature) |
| $y$ | output (temperature) in state space formulation |
| $\hat{Y}$ | predicted room air temperatures |
| $Y$ | measured room air temperatures |
| $\theta$ | estimate parameter |

## REFERENCES

Arendt, K, M Jradi, H R Shaker, C T Veje, and Southern Denmark. 2018. Comparative analysis of white-, gray- and black-box models for thermal simulation of indoor environment : teaching building case study. *Proceeding of 2018 Building Performance Modeling Conference and SimBuild*, Sep 26-28, 2018, Chicago, IL, U.S.

ASHRAE. 2017.ASHRAE Handbook – Fundamentals.

Bianchini, G., Casini, M., Pepe, D., Vicino, A., Zanvettor, G. G. 2019. An Integrated Model Predictive Control Approach for Optimal HVAC and Energy Storage Operation in Large-Scale Buildings. Applied Energy 240 (January): 327–40.

Blum, D. H., Arendt, K., Rivalin, L., Piette, M. A., Wetter, M., Veje, C. T. 2019. Practical Factors of Envelope Model Setup and Their Effects on the Performance of Model Predictive Control for

Building Heating , Ventilating , and Air Conditioning Systems. *Applied Energy* 236 (November 2018): 410–25.

Cai, J., Braun, J. E. 2015a. An Inverse Hygrothermal Model for Multi-Zone Buildings. *Journal of Building Performance Simulation* 1493 (November): 1–19.

Cai, J., Braun, J. E. 2015b. A generalized control heuristic and simplified model predictive control strategy for direct-expansion air-conditioning systems, Science and Technology for the Built Environment 21(6), 773-788.

Cai, J., Braun, J. E., Kim, D., Hu, J. 2016. General approaches for determining the savings potential of optimal control for cooling in commercial buildings having both energy and demand charges, Science and Technology for the Built Environment 22(6), 733-750.

Cui, B., Fan, R., C., Munk, J., Mao, N., Xiao, F., Dong, J., Kuruganti, T. 2019. A hybrid building thermal modeling approach for predicting temperatures in typical, detached, two-story houses. *Applied Energy* 236: 101-116.

Henze, G. P. 2013. Model predictive control for buildings: a quantum leap?. *Journal of Building Performance Simulation*, 6(3), 157–158.

Hosni, Mohammad H., Byron W. Jones, and Hanming Xu. 1999. Experimental Results for Heat Gain and Radiant/Convective Split from Equipment in Buildings. *ASHRAE Transactions* 105.

Joe, J. Karava, P. 2016. Agent-Based System Identification for Control- Oriented Building Models. *Journal of Building Performance Simulation* 0 (0): 1–22.

Joe, J., Karava, P., Hou, X., Xiao, Y., & Hu, J. 2018. A distributed approach to model-predictive control of radiant comfort delivery systems in office spaces with localized thermal environments. *Energy and Buildings*, *175*, 173–188. https://doi.org/10.1016/J.ENBUILD.2018.06.068

Joe, J. Karava, P. 2019. A model predictive control strategy to optimize the performance of radiant floor heating and cooling systems in office buildings. Applied Energy 245: 65–77.

Kim, D., Cai, J., Ariyur, K. B., & Braun, J. E. 2016. System identification for building thermal systems under the presence of unmeasured disturbances in closed loop operation: Lumped disturbance modeling approach. *Building and Environment*, *107*, 169–180.

Kim, D., Cai, J.,Braun, J. E., Ariyur, K. B. 2018. Energy & Buildings System Identification for Building Thermal Systems under the Presence of Unmeasured Disturbances in Closed Loop Operation: Theoretical Analysis and Application. *Energy & Buildings* 167: 359–69.

Mathworks®, 2019. website: https://www.mathworks.com/help/optim/ug/fmincon.html

Rawlings, B. James, David, Q. Mayne, Moritz, M. Diehl. 2018. Model Predictive Control: Theory, Computation, and Design, 2nd Edition, Nob Hill Publishing.

TRNSYS 16. 2007. Multizone Building modeling with Type56 and TRNBuild. http://web.mit.edu/parmstr/Public/Documentation/06-MultizoneBuilding.pdf

U.S. Department of Energy. 2018. Grid-Interactive Efficiency Buildings Overview Building Technologies Office, July 12, 2018. https://www.energy.gov/sites/prod/files/2018/07/f54/steab-july12_bto_geb.pdf